SKEE 3443- Power System Analysis

Semester 1 Session 2025/2026

Group Project

Load Flow Analysis in the IEEE 14-Bus Power System

LECTURER:

PREPARED BY:

SECTION 03&04

Video Link:
https://drive.google.com/drive/folders/1C9Mml9ymDj_GHRXnmLPNiKJAwEp2EQ6q?usp=sharing

Group members:

Member	Matric	Section
ABABAKER NAZAR OSMAN	A23KE0001	04
OMER YOUSIF ALI ABDELKARIM	A23KE0502	03
MUJTABA OSAMA ABBAS ALI	A23KE0504	03

1. Introduction:

Purpose of the Project: The objective of this project is to perform a comprehensive load flow analysis on the IEEE 14-Bus Power System. The goal is to analyze the system's steady-state performance by examining bus voltages (magnitudes and angles), transmission line power flows, and total system losses. Additionally, the project aims to evaluate the system's stability under stressed operating conditions and to apply voltage improvement techniques to rectify low-voltage buses. This analysis helps in understanding the relationship between reactive power support, voltage stability, and system loading.

Software Used: The simulation and analysis were conducted using **PowerWorld Simulator**. This software was chosen for its capability to visualize power flows and effectively model generator reactive power limits and voltage control devices.

2. System Data:

The system modeled is the standard IEEE 14-Bus test system with a system base of 100 MVA and a nominal voltage of 132 kV for all buses. The system topology consists of:

1. **5 Generators:** Located at Buses 1, 2, 3, 6, and 8.
2. **11 Loads:** Distributed across various PQ buses.
3. **20 Transmission Lines:** With parameters (R, X, B) provided in the project appendix.
4. **Bus Types:** Bus 1 is designated as the Slack Bus, Buses 2, 3, 6, and 8 are PV (Generator) buses, and the remaining buses are PQ (Load) buses.

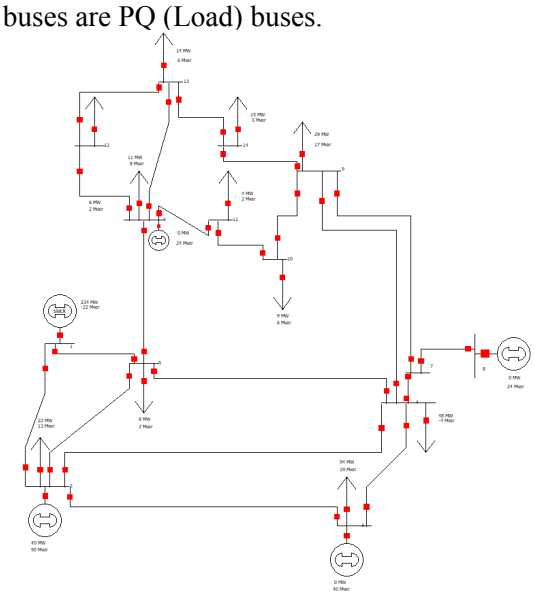

Figure 1: *Single-line diagram of the modeled IEEE 14-bus system in PowerWorld Simulator (Base Case).*

3. Task A: Case 1 Results (Base Case):

	From Number	From Name	To Number	To Name	MW From	MW To	Mvar From	Mvar To	MVA From	MVA To	Status	Circuit	Xfrmr	Branch Device Type	Lim MVA
1	1	1	2	2	158.6	-153.642	-25.8	35.823	160.7	157.763	Closed	1	NO	Line	100.0
2	1	1	5	5	75.8	-72.671	3.5	4.651	75.9	72.820	Closed	1	NO	Line	100.0
3	2	2	3	3	74.4	-71.701	-1.3	8.322	74.4	72.182	Closed	1	NO	Line	100.0
4	2	2	4	4	56.1	-54.246	0.8	1.727	56.1	54.273	Closed	1	NO	Line	100.0
5	2	2	5	5	41.5	-40.443	2.0	-2.179	41.5	40.501	Closed	1	NO	Line	100.0
6	3	3	4	4	-22.5	22.993	12.7	-12.595	25.8	26.217	Closed	1	NO	Line	100.0
7	4	4	5	5	-61.4	61.936	10.2	-8.457	62.2	62.511	Closed	1	NO	Line	100.0
8	4	4	7	7	28.7	-28.670	-0.0	1.882	28.7	28.731	Closed	1	NO	Line	100.0
9	4	4	9	9	16.2	-16.153	4.5	-2.813	16.8	16.396	Closed	1	NO	Line	100.0
10	5	5	6	6	43.6	-43.578	4.4	0.859	43.8	43.587	Closed	1	NO	Line	100.0
11	6	6	11	11	7.0	-6.878	4.9	-4.741	8.5	8.354	Closed	1	NO	Line	100.0
12	6	6	12	12	7.8	-7.707	2.7	-2.536	8.3	8.113	Closed	1	NO	Line	100.0
13	6	6	13	13	17.6	-17.355	8.0	-7.480	19.4	18.898	Closed	1	NO	Line	100.0
14	7	7	8	8	-0.0	0.000	-23.0	23.998	23.0	23.998	Closed	1	NO	Line	100.0
15	7	7	9	9	28.7	-28.670	21.1	-19.582	35.6	34.719	Closed	1	NO	Line	100.0
16	9	9	10	10	5.7	-5.641	2.9	-2.902	6.4	6.344	Closed	1	NO	Line	100.0
17	9	9	14	14	9.7	-9.519	2.9	-2.538	10.1	9.851	Closed	1	NO	Line	100.0
18	10	10	11	11	-3.4	3.378	-2.9	2.941	4.4	4.479	Closed	1	NO	Line	100.0
19	12	12	13	13	1.6	-1.598	0.9	-0.928	1.9	1.848	Closed	1	NO	Line	100.0
20	13	13	14	14	5.5	-5.381	2.6	-2.462	6.0	5.917	Closed	1	NO	Line	100.0

__Figure 2:__ Task A Base Case transmission line flow records for the IEEE 14-bus system

i. Bus Voltages The load flow analysis for the base case converged successfully. The resulting bus voltages indicate a weak voltage profile in the specific areas of the network.

	Number	Name	Area Name	Nom kV	PU Volt	Volt (kV)	Angle (Deg)
1	1	1	1	132.00	1.00000	132.000	0.00
2	2	2	1	132.00	0.98791	130.404	-5.71
3	3	3	1	132.00	0.96235	127.030	-14.59
4	4	4	1	132.00	0.95569	126.151	-11.64
5	5	5	1	132.00	0.96017	126.743	-9.94
6	6	6	1	132.00	0.95553	126.131	-16.82
7	7	7	1	132.00	0.95774	126.422	-15.40
8	8	8	1	132.00	1.00000	132.000	-15.40
9	9	9	1	132.00	0.93409	123.300	-17.42
10	10	10	1	132.00	0.92951	122.696	-17.67
11	11	11	1	132.00	0.93848	123.879	-17.40
12	12	12	1	132.00	0.93837	123.864	-17.88
13	13	13	1	132.00	0.93259	123.102	-17.95
14	14	14	1	132.00	0.91300	120.516	-18.93

__Figure 3:__ Bus Records and Power Flow results for the IEEE 14-Bus Base Case simulation.

Bus	P.U Value
9	0.93409
10	0.93837
11	0.93848
12	0.93259
13	0.92951
14	0.91300

__Table 1:__ Summary of critical buses below 0.95 p.u.

Analysis of Low-Voltage Buses: The simulation identified several buses with voltages below the acceptable threshold of 0.95 p.u. Shown in ***Table 1*** above.
Bus 14 is the most critical bus in the system with the lowest p.u value of 0.9130, situated electrically far from the generation sources, making it highly susceptible to voltage drops.
ii. Generator Outputs The generator active (P) and reactive (Q) power outputs for the base case are summarized below.

	Number of Bus	Name of Bus	ID	Status	Gen MW	Gen Mvar
1	1	1	1	Closed	234.32	-22.34
2	2	2	1	Closed	40.00	50.00
3	3	3	1	Closed	0.00	40.00
4	6	6	1	Closed	0.00	24.00
5	8	8	1	Closed	0.00	23.99

__Figure 4:__ Active (MW) and Reactive (Mvar) power outputs of all five generators for the IEEE 14-Bus Base Case simulation.

Analysis of Generator Limits: A critical observation from the simulation is that the system is reactive power limited. As shown in the results:

Every PV bus generator has reached its maximum reactive power capability in an attempt to maintain the system voltage. Since they cannot inject any further reactive power, the voltage at the load buses (9-14) has sagged significantly. The Slack Bus (Bus 1) is absorbing **-22.34 Mvar** to balance the system.

iii. System Losses The total system losses for the Base Case were calculated as follows:

- Total Active Power Loss: **15.4 MW**
- Total Reactive Power Loss: **42.1 Mvar**

Stressed Condition Results (150% Load):

i. Method Implemented: To simulate stressed operating conditions, both active (P) and reactive (Q) loads at all buses were uniformly increased by 150% (multiplied by a scale factor of 1.5) using the "Scale Case" tool in PowerWorld. Generator settings were kept constant.

ii. Stressed Case Results: The system successfully solved under the stressed condition, but the voltage profile deteriorated severely.

	From Number	From Name	To Number	To Name	MW From	MW To	Mvar From	Mvar To	MVA From	MVA To	Status	Circuit	Xfrmr	Branch Device Type	Lim MVA
1	1	1	2	2	278.8	-261.201	110.8	-61.975	300.0	268.453	Closed	1	NO	Line	100.0
2	1	1	5	5	123.3	-112.185	71.2	-29.242	142.4	115.934	Closed	1	NO	Line	100.0
3	2	2	3	3	115.9	-107.061	36.5	-2.410	121.5	107.088	Closed	1	NO	Line	100.0
4	2	2	4	4	88.3	-81.808	31.0	-13.694	93.6	82.946	Closed	1	NO	Line	100.0
5	2	2	5	5	64.5	-60.973	25.4	-17.232	69.3	63.362	Closed	1	NO	Line	100.0
6	3	3	4	4	-34.2	35.757	13.9	-10.847	37.0	37.366	Closed	1	NO	Line	100.0
7	4	4	5	5	-93.9	95.826	-4.9	10.988	94.0	96.454	Closed	1	NO	Line	100.0
8	4	4	7	7	43.8	-43.833	19.5	-11.678	48.0	45.362	Closed	1	NO	Line	100.0
9	4	4	9	9	24.4	-24.420	15.8	-8.158	29.1	25.747	Closed	1	NO	Line	100.0
10	5	5	6	6	65.9	-65.933	33.1	-11.879	73.8	66.995	Closed	1	NO	Line	100.0
11	6	6	11	11	10.2	-9.936	6.9	-6.321	12.3	11.776	Closed	1	NO	Line	100.0
12	6	6	12	12	12.0	-11.579	4.6	-3.783	12.8	12.182	Closed	1	NO	Line	100.0
13	6	6	13	13	27.0	-25.857	13.2	-10.982	30.0	28.093	Closed	1	NO	Line	100.0
14	7	7	8	8	-0.0	0.035	-22.4	23.980	22.4	23.980	Closed	1	NO	Line	100.0
15	7	7	9	9	43.9	-43.869	34.1	-27.878	55.5	51.977	Closed	1	NO	Line	100.0
16	9	9	10	10	9.0	-8.883	5.4	-5.204	10.5	10.295	Closed	1	NO	Line	100.0
17	9	9	14	14	15.1	-14.373	5.8	-4.307	16.1	15.004	Closed	1	NO	Line	100.0
18	10	10	11	11	-4.6	4.684	-3.5	3.624	5.8	5.922	Closed	1	NO	Line	100.0
19	12	12	13	13	2.4	-2.391	1.4	-1.358	2.8	2.750	Closed	1	NO	Line	100.0
20	13	13	14	14	8.0	-7.709	3.7	-3.081	8.8	8.302	Closed	1	NO	Line	100.0

Figure 5: *Task A Stressed Case transmission line flow records for the IEEE 14-bus system*

	Number	Name	Area Name	Nom kV	PU Volt	Volt (kV)	Angle (Deg)
1	1	1	1	132.00	1.00000	132.000	0.00
2	2	2	1	132.00	0.89038	117.530	-9.24
3	5	5	1	132.00	0.80418	106.152	-17.01
4	8	8	1	132.00	0.79442	104.864	-29.62
5	4	4	1	132.00	0.78401	103.490	-20.55
6	3	3	1	132.00	0.78111	103.106	-26.94
7	7	7	1	132.00	0.74125	97.845	-29.62
8	6	6	1	132.00	0.73033	96.404	-33.45
9	11	11	1	132.00	0.69856	92.210	-34.99
10	12	12	1	132.00	0.69505	91.746	-36.27
11	9	9	1	132.00	0.69377	91.578	-35.01
12	13	13	1	132.00	0.68334	90.201	-36.48
13	10	10	1	132.00	0.68315	90.176	-35.71
14	14	14	1	132.00	0.64550	85.206	-39.28

Figure 6: *Bus voltage magnitudes and angles under the Stressed Condition (150% load scaling), showing severe voltage degradation.*

Bus	P.U Value
9	0.69377
10	0.68315
11	0.69856
12	0.69505
13	0.68334
14	0.64550

Table 2: *Summary of Most Stressed buses Voltages.*

Comparison and Discussion:

- **Critical Voltage Drop:** The voltage at Bus 14 collapsed from 0.913 p.u. to 0.6455 p.u.
- **Widespread Violations:** Under these stressed conditions, 10 out of 14 buses dropped below 0.80 p.u.
- **Cause of Collapse:** In the base case, generators were already at their maximum reactive limits (Q_{max}). When the load was increased by 50%, the generators had zero reactive reserve to support the additional demand. This forced the Slack Bus (Bus 1) to drastically increase its output (supplying 182.07 Mvar, up from absorbing -22.34 Mvar) to prevent total system blackout, but the transmission voltage drops became excessive.

Task B:
Method 1 (Shunt Capacitor):
4. Case 2 Results (Method 1):

i. Method Implemented: To improve the voltage at the critical bus (**Bus 14**), a Shunt Capacitor was selected as the voltage improvement technique.

- **Location:** Bus 14 (The weakest bus).
- **Sizing:** A **9 Mvar** capacitor bank was installed.

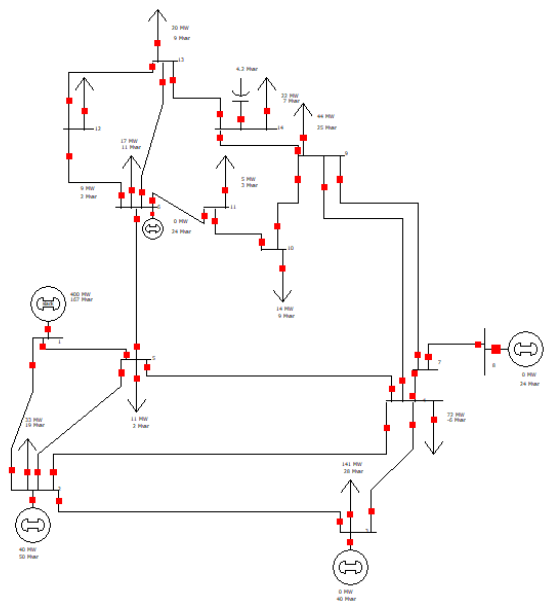

Figure 7: *Single-line diagram of the IEEE 14-bus system under stressed condition (150% load) with a* ***9 Mvar Shunt Capacitor*** *successfully installed at Bus 14.*

- **Reasoning:** The system was identified as being reactive power-limited. Installing a shunt capacitor at the load bus provides local reactive power support (Q_c). This reduces the reactive power flow required from distant generators, thereby reducing the voltage drop across the transmission lines leading to Bus 14.

ii. Voltage Comparison (Before vs. After): The installation of the 9 Mvar capacitor successfully improved the voltage profile.

- **Bus 14 Voltage:** Increased from **0.6455 p.u.** to **0.6826 p.u.**
- **Percentage Improvement:** This represents an increase of approximately **5.7%**, meeting the project objective of a ~5% improvement.

	From Number	From Name	To Number	To Name	MW From	MW To	Mvar From	Mvar To	MVA From	MVA To	Status	Circuit	Xfrmr	Branch Device Type	Lim MVA
1	1	1	2	2	277.1	-260.090	101.1	-54.102	294.9	265.657	Closed	1	NO	Line	100.0
2	1	1	5	5	123.1	-112.355	66.0	-25.874	139.7	115.296	Closed	1	NO	Line	100.0
3	2	2	3	3	115.4	-106.826	34.4	-1.500	120.4	106.837	Closed	1	NO	Line	100.0
4	2	2	4	4	87.9	-81.738	27.9	-11.468	92.3	82.539	Closed	1	NO	Line	100.0
5	2	2	5	5	64.2	-60.883	22.8	-15.176	68.2	62.745	Closed	1	NO	Line	100.0
6	3	3	4	4	-34.5	35.934	13.0	-10.080	36.8	37.321	Closed	1	NO	Line	100.0
7	4	4	5	5	-94.1	96.010	-3.4	9.280	94.2	96.458	Closed	1	NO	Line	100.0
8	4	4	7	7	43.8	-43.812	16.6	-9.417	46.9	44.812	Closed	1	NO	Line	100.0
9	4	4	9	9	24.4	-24.438	14.1	-7.167	28.2	25.467	Closed	1	NO	Line	100.0
10	5	5	6	6	65.8	-65.827	29.4	-9.709	72.1	66.540	Closed	1	NO	Line	100.0
11	6	6	11	11	10.2	-9.980	6.7	-6.173	12.2	11.735	Closed	1	NO	Line	100.0
12	6	6	12	12	11.9	-11.516	4.2	-3.441	12.6	12.019	Closed	1	NO	Line	100.0
13	6	6	13	13	26.9	-25.936	11.6	-9.634	29.3	27.668	Closed	1	NO	Line	100.0
14	7	7	8	8	-0.0	0.000	-22.5	24.000	22.5	24.000	Closed	1	NO	Line	100.0
15	7	7	9	9	43.8	-43.812	31.9	-26.324	54.2	51.112	Closed	1	NO	Line	100.0
16	9	9	10	10	8.9	-8.824	5.5	-5.353	10.5	10.321	Closed	1	NO	Line	100.0
17	9	9	14	14	15.1	-14.523	3.1	-1.815	15.4	14.636	Closed	1	NO	Line	100.0
18	10	10	11	11	-4.7	4.730	-3.3	3.473	5.8	5.869	Closed	1	NO	Line	100.0
19	12	12	13	13	2.4	-2.338	1.0	-1.015	2.6	2.548	Closed	1	NO	Line	100.0
20	13	13	14	14	8.0	-7.793	1.9	-1.480	8.3	7.932	Closed	1	NO	Line	100.0

Figure 8: *Task B Method 1 transmission line flow records for the IEEE 14-bus system*

	Number	Name	Area Name	Nom kV	PU Volt	Volt (kV)	Angle (Deg)
1	1	1	1	132.00	1.00000	132.000	0.00
2	2	2	1	132.00	0.89652	118.340	-9.23
3	5	5	1	132.00	0.81609	107.724	-16.92
4	8	8	1	132.00	0.81402	107.450	-29.05
5	4	4	1	132.00	0.79704	105.210	-20.37
6	3	3	1	132.00	0.79219	104.569	-26.55
7	7	7	1	132.00	0.76208	100.595	-29.05
8	6	6	1	132.00	0.75334	99.440	-32.57
9	11	11	1	132.00	0.72299	95.435	-34.05
10	12	12	1	132.00	0.72067	95.128	-35.24
11	9	9	1	132.00	0.71884	94.887	-34.10
12	13	13	1	132.00	0.71054	93.791	-35.51
13	10	10	1	132.00	0.70845	93.515	-34.74
14	14	14	1	132.00	0.68256	90.098	-38.42

Figure 9: *Simulation results showing the improved bus voltage profile for the stressed system (150% Load) after installing a* ***9 Mvar Shunt Capacitor*** *at Bus 14.*

Table 3: *Numerical comparison of critical bus voltages before & after the application of a 9 Mvar Shunt Capacitor.*

Bus	P.U Value Without the Shunt Capacitor	P.U Value With the Shunt Capacitor
9	0.69377	0.72299
10	0.68315	0.72067
11	0.69856	0.71884
12	0.69505	0.71054
13	0.68334	0.70845
14	0.64550	0.68256

iii. Change in Reactive Power Generation: The addition of the capacitor provided local support, reducing the burden on the Slack Bus, although the local generators remained saturated due to the extreme system stress.

- **Slack Bus (Gen 1):** The reactive power output required from the Slack Bus dropped from **182.07 Mvar** to **167.15 Mvar**. This indicates that the capacitor successfully offloaded about 9 Mvar of reactive demand from the grid supply.
- **Local Generators (2, 3, 6, 8):** Even with the improvement, Generators 2, 3, 6, and 8 remained at their maximum limits (Q_{max}), confirming that the system remains under heavy stress despite the voltage improvement.

	Number of Bus	Name of Bus	ID	Status	Gen MW	Gen Mvar
1	1	1	1	Closed	400.13	167.15
2	2	2	1	Closed	40.00	50.00
3	3	3	1	Closed	0.00	40.00
4	6	6	1	Closed	0.00	24.00
5	8	8	1	Closed	0.00	24.00

Figure 10: *Generator active and reactive power outputs under 150% load with the 9 Mvar capacitor installed at Bus 14.*

iv. System Losses:

- Total Active Power Loss: **51.6 MW**.
- Total Reactive Power Loss: **199.1 Mvar**.

v. Discussion: The **9 Mvar capacitor** at Bus 14 successfully stabilized the stressed 132 kV network. By providing local reactive support, it lifted the Bus 14 voltage from **0.64550 p.u.** to **0.68256 p.u.**, a **5.7% improvement** that meets the project target. This reduced the load on transmission lines, raising neighboring voltages at Bus 13 (**0.70845 p.u.**) and Bus 9 (**0.72299 p.u.**). Additionally, it relieved the **Slack Bus**, lowering its reactive output from **182.07 Mvar** to **167.15 Mvar**.

Method 2 (Stressed Condition)

Case 2 Results (Method 2):

i. Method Implemented: Adjusting Generator Reactive Power Limits

To fulfill the requirement of applying a second voltage improvement technique, the reactive power limits of a key generator were adjusted.

- **Location:** Generator at Bus 8.
- **Adjustment:** The maximum reactive power limit (Q_{max}) was increased from **24.0 Mvar** to **32.5 Mvar**.

- **Reasoning:** In the stressed base case, Generator 8 is the closest voltage control device to the critical load area (Bus 14). It was observed to be saturated at its limit (24 Mvar). By increasing this limit to 32.5 Mvar, the generator is permitted to inject additional reactive power to support the local voltage.

ii. Voltage Comparison (Method 2) Relaxing the limit on Generator 8 successfully improved the voltage profile to meet the 5% target.

- **Bus 14 Voltage:** Increased from **0.6455 p.u.** to **0.6795 p.u.**
- **Percentage Improvement:** This represents an increase of approximately **5.3%**, satisfying the project requirement.

	Number	Name	Area Name	Nom kV	PU Volt	Volt (kV)	Angle (Deg)
1	1	1	1	132.00	1.00000	132.000	0.00
2	2	2	1	132.00	0.89908	118.679	-9.24
3	8	8	1	132.00	0.84442	111.463	-28.86
4	5	5	1	132.00	0.82071	108.334	-16.88
5	4	4	1	132.00	0.80284	105.975	-20.33
6	3	3	1	132.00	0.79702	105.206	-26.41
7	7	7	1	132.00	0.77662	102.514	-28.86
8	6	6	1	132.00	0.75726	99.959	-32.27
9	11	11	1	132.00	0.72923	96.259	-33.74
10	9	9	1	132.00	0.72786	96.078	-33.80
11	12	12	1	132.00	0.72388	95.553	-34.88
12	10	10	1	132.00	0.71677	94.613	-34.43
13	13	13	1	132.00	0.71309	94.127	-35.09
14	14	14	1	132.00	0.67954	89.699	-37.69

Figure 11: *Bus voltage magnitudes and angles for the 150% stressed load condition after increasing the Generator 8 reactive power limit to 32.5 Mvar.*

	From Number	From Name	To Number	To Name	MW From	MW To	Mvar From	Mvar To	MVA From	MVA To	Circuit	Status	Branch Device Type	Xfrmr	Lim MVA
1	1	1	2	2	276.5	-259.780	97.0	-50.696	293.1	264.680	1	Closed	Line	NO	100.0
2	1	1	5	5	123.0	-112.404	64.0	-24.541	138.6	115.052	1	Closed	Line	NO	100.0
3	2	2	3	3	115.2	-106.767	33.4	-1.006	119.9	106.771	1	Closed	Line	NO	100.0
4	2	2	4	4	87.9	-81.820	26.4	-10.298	91.8	82.465	1	Closed	Line	NO	100.0
5	2	2	5	5	64.1	-60.822	21.9	-14.461	67.7	62.518	1	Closed	Line	NO	100.0
6	3	3	4	4	-34.5	35.964	12.5	-9.669	36.7	37.241	1	Closed	Line	NO	100.0
7	4	4	5	5	-94.5	96.396	-1.3	7.101	94.6	96.657	1	Closed	Line	NO	100.0
8	4	4	7	7	44.2	-44.231	13.4	-6.438	46.2	44.697	1	Closed	Line	NO	100.0
9	4	4	9	9	24.5	-24.472	13.7	-6.923	28.1	25.432	1	Closed	Line	NO	100.0
10	5	5	6	6	65.4	-65.430	29.5	-10.227	71.8	66.225	1	Closed	Line	NO	100.0
11	6	6	11	11	10.0	-9.754	6.0	-5.527	11.6	11.211	1	Closed	Line	NO	100.0
12	6	6	12	12	11.9	-11.525	4.4	-3.685	12.7	12.100	1	Closed	Line	NO	100.0
13	6	6	13	13	26.8	-25.775	12.6	-10.590	29.6	27.866	1	Closed	Line	NO	100.0
14	7	7	8	8	0.0	-0.005	-29.9	32.500	29.9	32.500	1	Closed	Line	NO	100.0
15	7	7	9	9	44.2	-44.227	36.3	-30.354	57.2	53.641	1	Closed	Line	NO	100.0
16	9	9	10	10	9.1	-9.039	6.2	-5.971	11.0	10.833	1	Closed	Line	NO	100.0
17	9	9	14	14	15.3	-14.681	6.2	-4.822	16.6	15.453	1	Closed	Line	NO	100.0
18	10	10	11	11	-4.5	4.504	-2.7	2.828	5.2	5.318	1	Closed	Line	NO	100.0
19	12	12	13	13	2.4	-2.345	1.3	-1.259	2.7	2.661	1	Closed	Line	NO	100.0
20	13	13	14	14	7.9	-7.629	3.2	-2.660	8.5	8.080	1	Closed	Line	NO	100.0

Figure 12: *Task B Method 2 transmission line flow records for the IEEE 14-bus system*

iii. Change in Reactive Power Generation

- **Generator 8 Output:** The generator immediately utilized the newly available capacity, increasing its output from **23.99 Mvar** to **32.50 Mvar**. The fact that it hit exactly 32.50 Mvar indicates the system is still "Var-starved" and would take even more reactive power if allowed.
- **Slack Bus (Gen 1):** The reactive support from the Slack Bus reduced slightly from **182.07 Mvar** to **161.04 Mvar**, confirming that the local support from Gen 8 relieved some burden from the main grid.

	Number of Bus	Name of Bus	ID	Status	Gen MW	Gen Mvar
1	1	1	1	Closed	399.48	161.04
2	2	2	1	Closed	40.00	50.00
3	3	3	1	Closed	0.00	40.00
4	6	6	1	Closed	0.00	24.00
5	8	8	1	Closed	0.00	32.50

Figure 13: *Active and reactive power generation levels for Method 2, showing Generator 8 is operating at its new maximum limit of 32.50 Mvar.*

iv. System Losses The adjustment of Generator 8's reactive limit resulted in slightly lower losses compared to the capacitor method, as the support was distributed more effectively from a transmission node.

- **Total Active Power Loss: 51.03 MW**
- **Total Reactive Power Loss: 197.3 Mvar**

5. Discussion & Comparison of Methods:

Two distinct methods were applied to alleviate the voltage collapse in the stressed system (150% Load). Both methods were tuned to achieve an approximate +5% voltage improvement at the critical bus.

Comparison Table:

Feature	Method 1: Shunt Capacitor	Method 2: Generator Adjustment
Parameter Changed	Added 9 Mvar Capacitor at Bus 14	Increased Gen 8 Q_{max} to 32.5 Mvar
New Voltage (Bus 14)	0.6826 p.u.	0.6795 p.u.
System Losses	51.6 MW / 199.1 Mvar	51.03 MW / 197.3 Mvar
Implementation	Requires installing new hardware (Capacitor Bank)	Requires utilizing existing capacity or upgrading excitation

Table 4: *Technical comparison of the Shunt Capacitor (Method 1) versus the Generator Limit Adjustment (Method 2) for the 150% stressed load condition.*

5. Discussion

- **Impact on Surrounding Buses:** Method 1 (Shunt Capacitor) provides superior local support by injecting reactive power directly at the load center, which lifted the voltage at Bus 14 from 0.64550 p.u. to **0.68256 p.u.**. This intervention created a positive effect on neighboring buses; Bus 13 improved from 0.68334 p.u. to **0.70845 p.u.**, and Bus 9 improved from 0.69377 p.u. to **0.72299 p.u.**. In contrast, Method 2 (Generator 8 adjustment) offers a more balanced lift across the central 132 kV grid. While the resulting voltage at Bus 14 was slightly lower at **0.67954 p.u.**, the support from the generation node improved the voltage profile for a wider area of the network rather than just the endpoint.
- **Effect on System Losses:** Method 2 is the more efficient technical solution for the overall grid, resulting in lower total system losses of **51.03 MW and 197.3 Mvar**. Method 1 incurs higher losses of **51.6 MW and 199.1 Mvar**. This difference occurs because Method 1 provides excellent local support, but the remote generators must still transport high amounts of power across transmission lines to reach the stressed load centers, whereas Method 2 supports the network from a more central transmission node.

6. Conclusion:

Summary of Findings: In the base case, generators were already at their reactive limits, leaving no reserve for load growth. Under **150% load**, this caused a voltage collapse at **Bus 14 (0.6455 p.u.)**. Both the **9 Mvar capacitor** and adjusting **Generator 8 to 32.5 Mvar** successfully restored stability and met the ~5% improvement target.

What was Learned about Voltage Control:

- **Proximity of Support**: Localized reactive power support is the most effective way to correct severe voltage drops at remote load centers. By installing the capacitor directly at Bus 14, the voltage was improved more effectively than by adjusting distant generators.
- **Importance of Dynamic Reserve**: A stable power system requires generators to maintain a "reactive reserve" rather than operating at their maximum Q_{max} limits. When generators are saturated, they lose the ability to respond to load fluctuations, making the system highly vulnerable to voltage collapse.
- **Efficiency vs. Localization**: There is a clear trade-off between local voltage magnitude and overall grid efficiency. While capacitors provide the best local lift, generator-side adjustments can be more efficient for the entire network, resulting in lower total system losses.
- **System Sensitivity**: In a "Var-starved" network, even small increases in load can lead to disproportionately large voltage drops if the system lacks sufficient reactive compensation.